PRODUCT DATA SHEET - CORE BRANCH

bouncepad®

Tablet attachment:	Arm:	Mounting:	Packaged weight:	Colour:
Core	Static60	Fixing from **Below** Fixing from **Above**	1.01kg	White Black

Mounting:
Fixing from Below

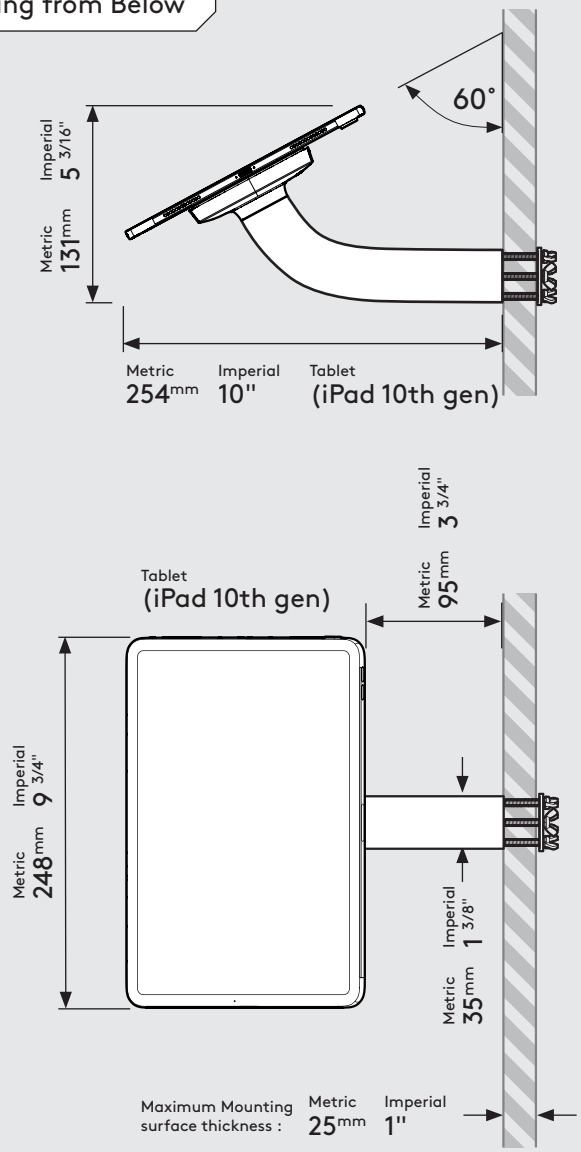

Mounting:
Fixing from Above

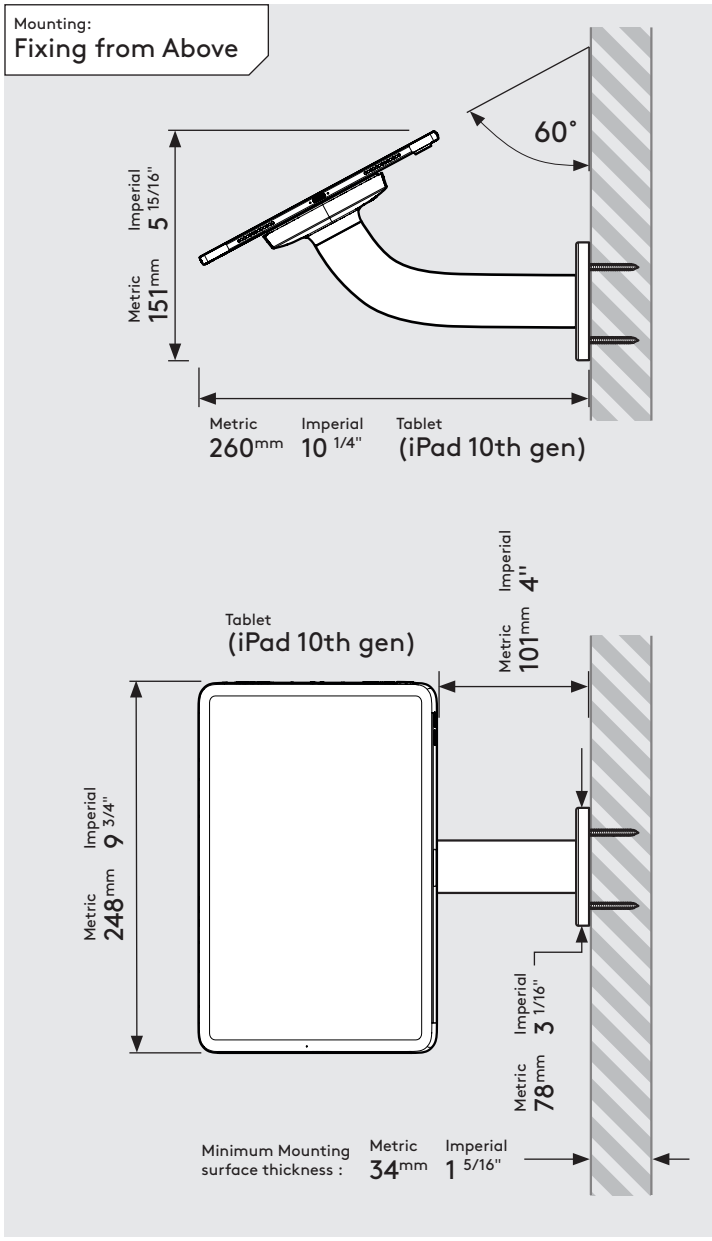

Parts in the Box

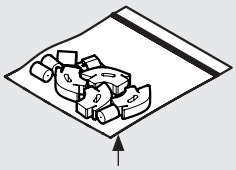

Tablet Set-up Kit

Fixings Kit

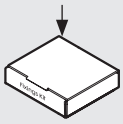

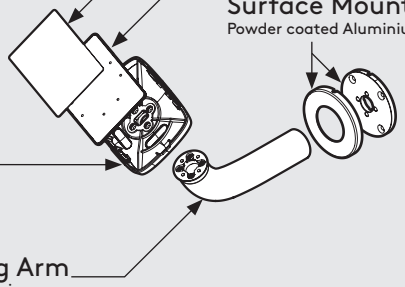

Sticker Pad
3M VHB Adhesive

Mounting Plate
PC/ABS Plastic

Surface Mounting Kit
Powder coated Aluminium

Shell
PC/ABS Plastic

Branch Mounting Arm
Powder coated Steel, Aluminium

Sheet Code: BP-DAT-CBRA_REV0
Release Date: 21/05/2024

Copyright 2016 Spotspot Ltd. (T/A Bouncepad) all rights reserved.
Confidential, no part of this publication may be reproduced or transmitted in any form without the written permission of the copyright holder.