PRODUCT DATA SHEET - CORE COUNTER 60

bouncepad®

Tablet attachment:	Arm:	Mounting:	Packaged weight:	Colour:
Core	Static60	Freestanding Base	2.9kg	White Black

Dimensions

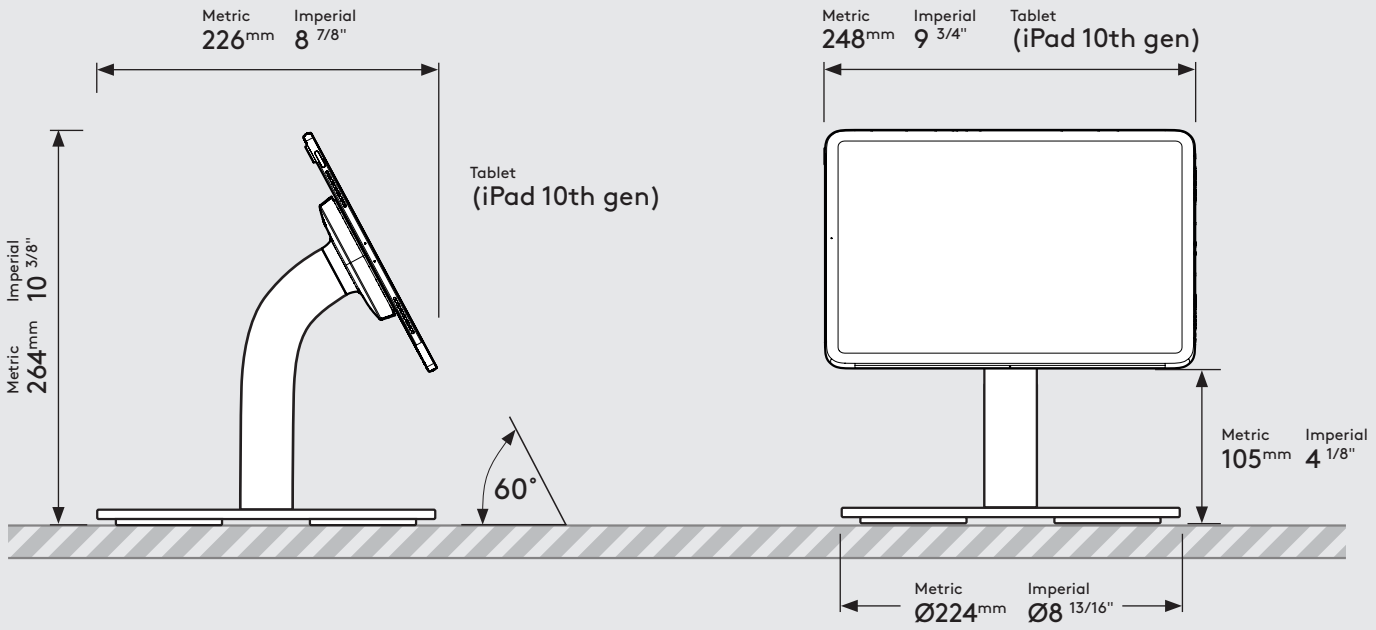

Parts in the Box

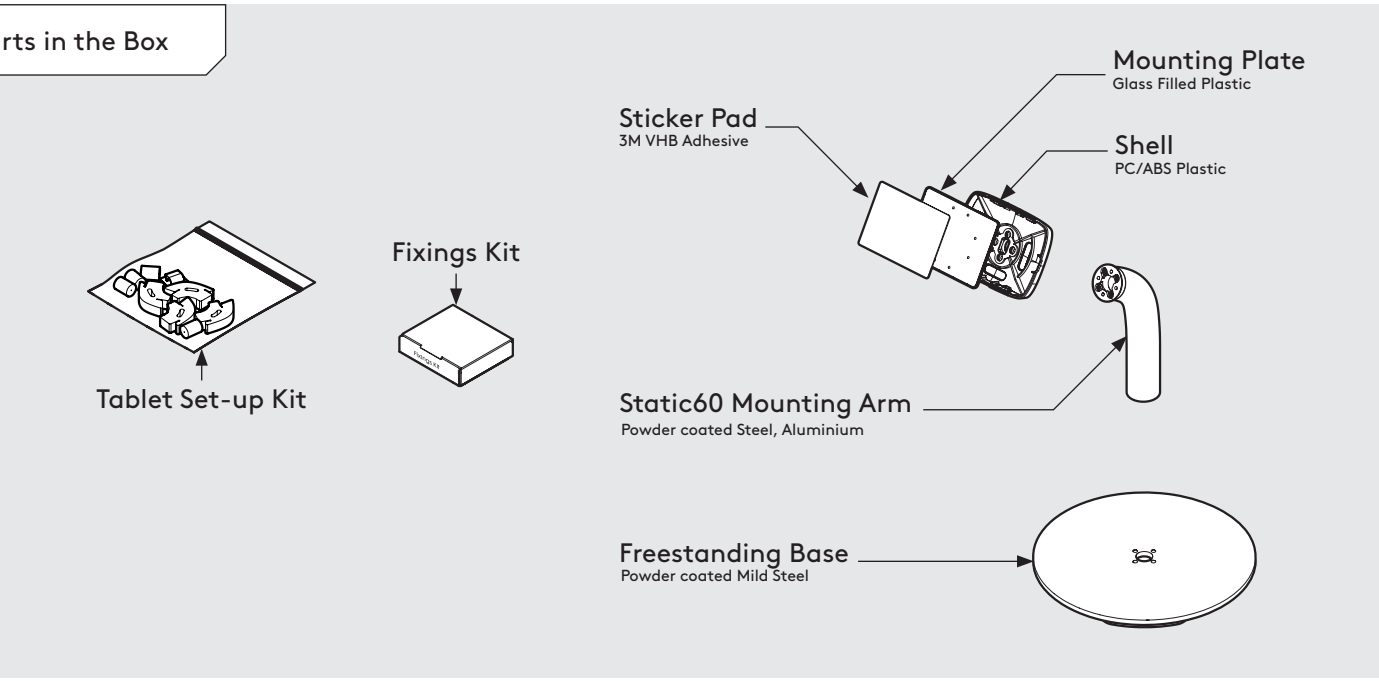

Sheet Code: BP-DAT-CSCO_REV0
Release Date: 28/05/2024

Copyright 2016 Spotspot Ltd. (T/A Bouncepad) all rights reserved.
Confidential, no part of this publication may be reproduced or transmitted in any form without the written permission of the copyright holder.